Oil Cooler, Engine, with Bracket for Shut-Off Valve: A

TWD630ME

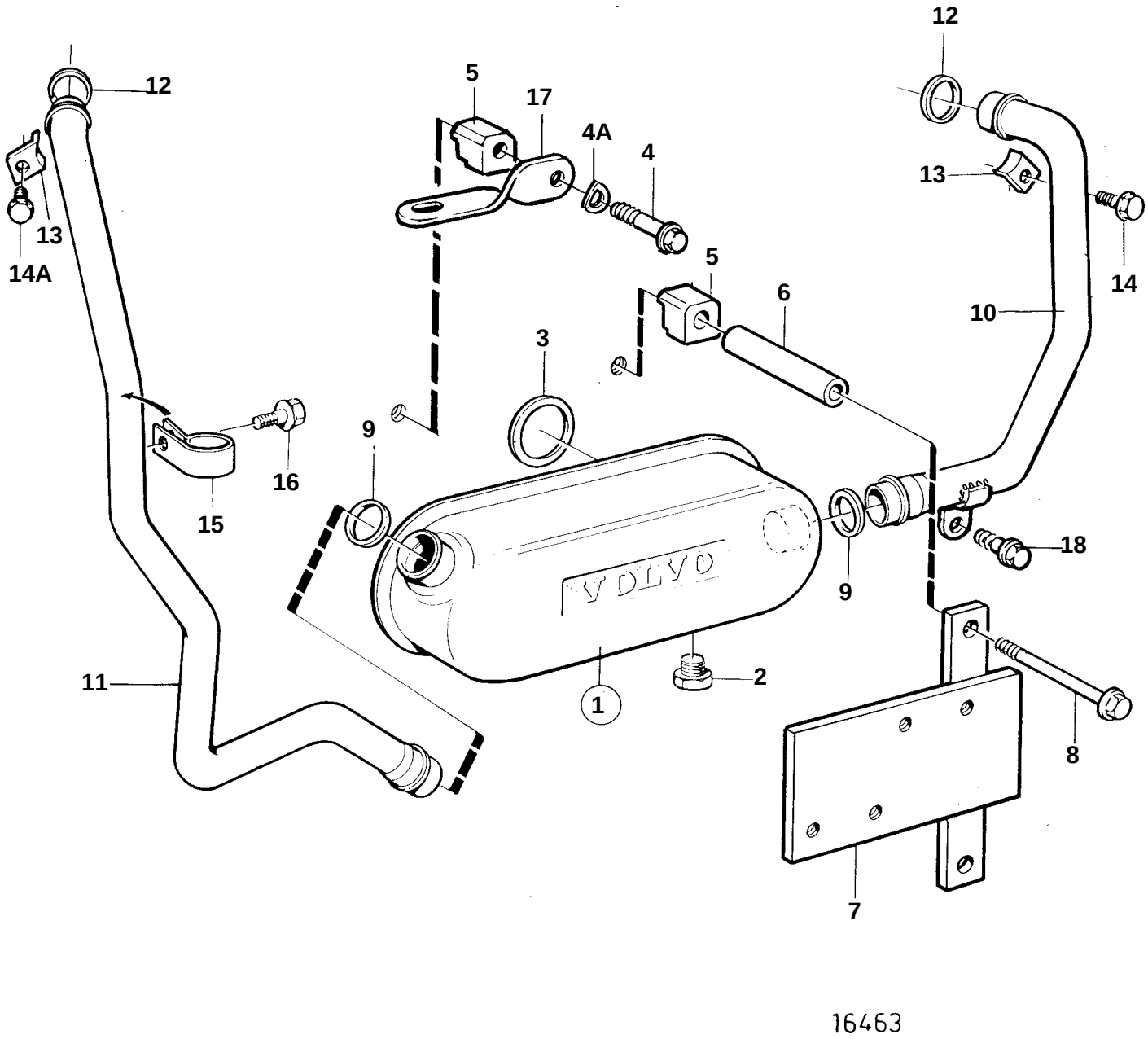

TWD630ME

REF	PART NO.	QTY	DESCRIPTION	NOTES
1	864915	1	Oil cooler	
2	180759	1	· Plug	
3	471467	2	Sealing ring	
4	965186	4	Flange screw	L=50mm
4A	941908	4	Spring washer	
5	471804	4	Retainer	
6	822779	2	Spacer sleeve	
7	3826159	1	Bracket	
8	969313	2	Flange screw	L=110mm
9	471708	2	Sealing ring	
10	848467	1	Coolant pipe	Cylinder block-oil cooler.
11	849672	1	Coolant pipe	Thermostat housing-oil cooler.
12	471637	2	Sealing ring	
13	421654	2	Clamp	
14	946440	1	Flange screw	L=16mm
14A	949846	1	Screw	L=20mm, Tapping screw.
15	968508	1	Clamp	
16	946440	1	Flange screw	L=16mm
17	1136551	1	Bracket	L=110mm
18	946173	1	Flange screw	M8x20mm